## ANNAPOLIS KITCHEN FAUCET

# 4200

- MAX COUNTER THICKNESS 2-3/8"
- MINIMUM INSTALL HOLE SIZE 1-3/8"

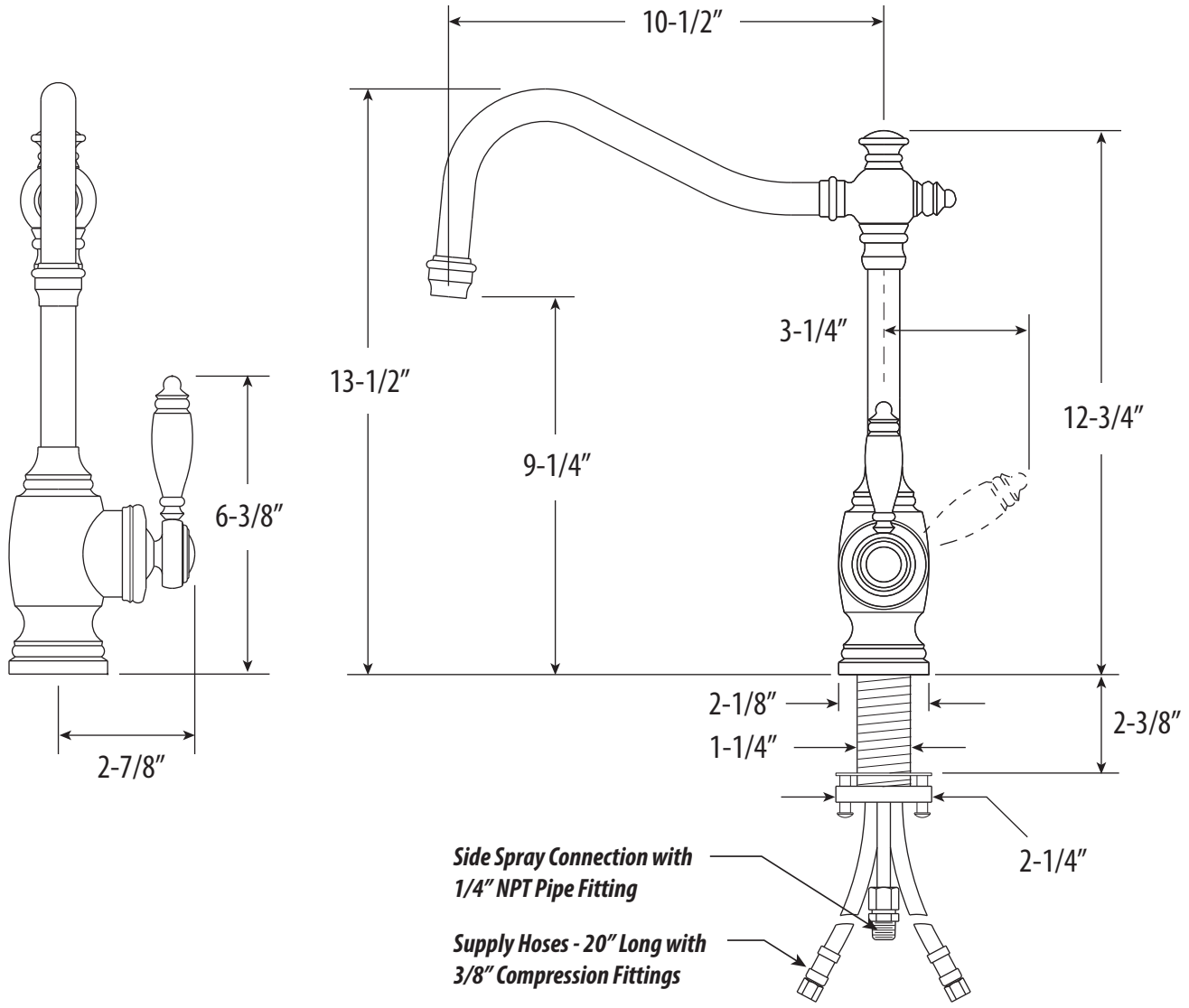


*DIMENSIONS MAY VARY AND ARE SUBJECT TO CHANGE. NO RESPONSIBILITY IS ASSUMED FOR USE OF SUPERCEDED OR VOIDED DATA*