SOAP/LOTION DISPENSER INSTALLATION

CONTEMPORARY MODELS # 4065, 4065E
INDUSTRIAL MODELS # 9065, 9065E

BEFORE YOU BEGIN YOUR INSTALLATION:

REQUIRED TOOLS:

Adjustable Wrench

1.

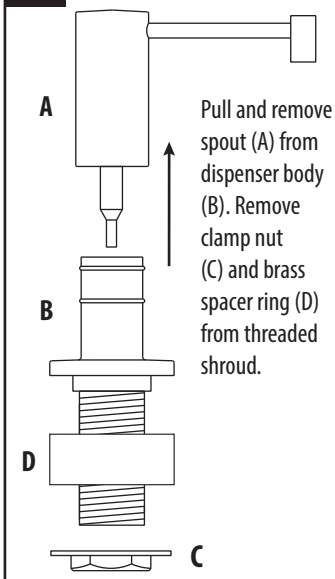

Pull and remove spout (A) from dispenser body (B). Remove clamp nut (C) and brass spacer ring (D) from threaded shroud.

2.

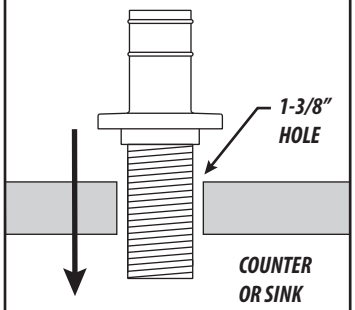

Fit dispenser body through 1-3/8" hole on counter or sink. *(No plumbers putty is required. O-ring seals base).*

3.

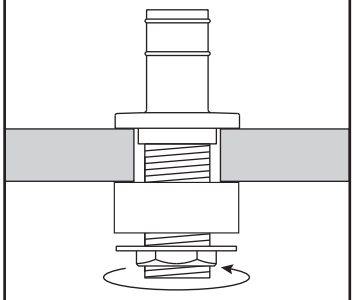

Slide the brass spacer ring up to top of dispenser shroud, then thread the clamp nut. Tighten nut snug to underside of sink or counter.

4.

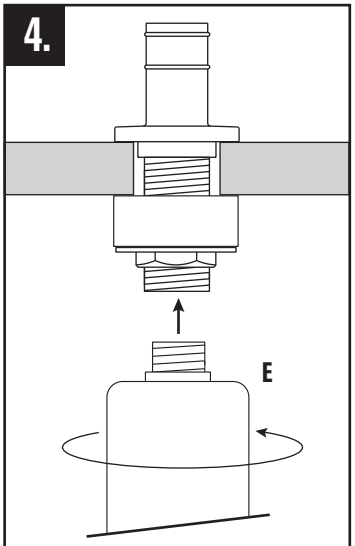

Thread bottle (E) into bottom of dispenser shroud.

5.

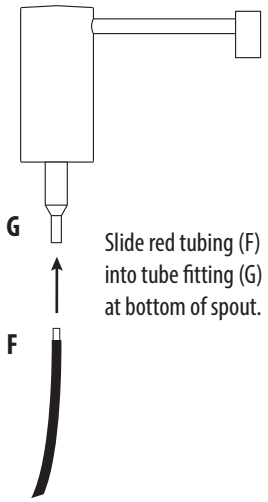

Slide red tubing (F) into tube fitting (G) at bottom of spout.

6.

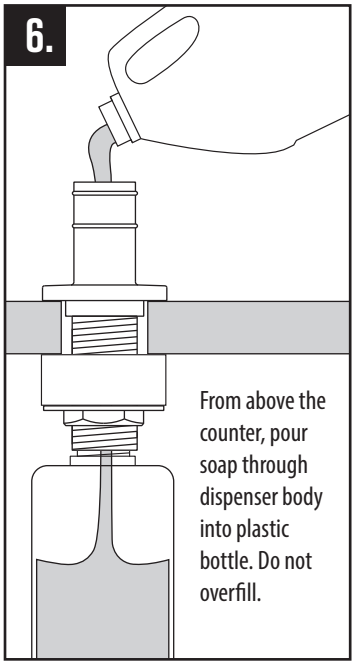

From above the counter, pour soap through dispenser body into plastic bottle. Do not overfill.

7.

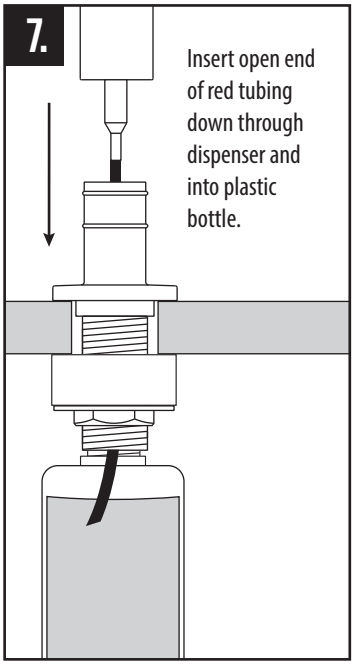

Insert open end of red tubing down through dispenser and into plastic bottle.

8.

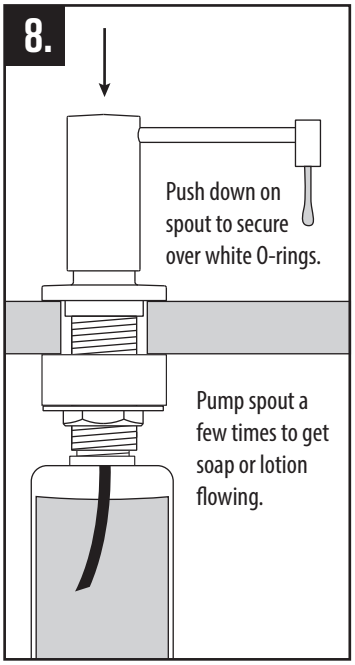

Push down on spout to secure over white O-rings.

Pump spout a few times to get soap or lotion flowing.

41180 Raintree Court • Murrieta, CA 92562
1-888-304-0660 • 951-304-0520
www.waterstoneco.com

★ MADE IN THE USA ★

VEN-038-SOAP Rev. D